UP/DOWN LINEAR

DP

Suspended

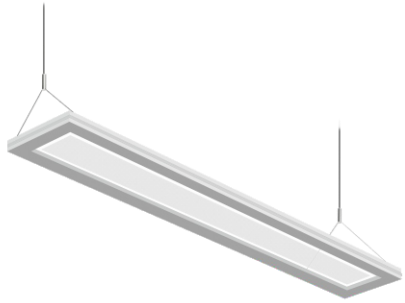

Product Ordering Guide

Sample

DP4 - DM - 35 E
1 2 3

[ ] - [ ] - [ ]
1 2 3

1. Length & Wattage

☐	DP4	8"X4' 40W
☐	DE14	1'X4' 54W
☐	DP8	8"X8' 80W

2. Dimming

☐	DM	0-10V Dimming

3. CCT

☐	40T	CCT Adjustable Option: 3000K, 3500K ,4000K (Only for DP4)
☐	30E	3000K
☐	35E	3500K
☐	40E	4000K
☐	50E	5000K

Installation Ordering Guide

Pendant Accessory

- ☐ For Dry Ceiling
- ☐ For Drop Ceiling /T-Grid Ceiling

Canopy

- ☐ Round (2"& 4")
- ☐ Square (2"& 4")

Interactive Menu

Order Information ..... Page 1
Product Specification ..... Page 2
Dimension& Mounting ..... Page 3
Photometric Data - 8"x4' CCT Adjustable Page 4
Photometric Data - 8"x4' Standard ..... Page 5
Photometric Data - 1'x4' Standard ..... Page 6
Photometric Data - 8"x8' Standard ..... Page 7

Product design and development is an ongoing process at OKT Lighting. We reserve the right to change specifications.

Specification

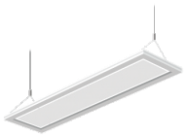

Model	DP4-DM-XXE	DP4-DM-XXT CCT Adjustable	DE14-DM-XXE	DP8-DM-XXE
Dimension	8"x4'	8"x4'	1'x4'	8"x8'
Efficacy	>115 LM/W >1150LM/FT	>115 LM/W >1150LM/FT	>105LM/W >1417LM/FT	>115LM/W >1150LM/FT
Input Power	40W	40W	54W	80W
Luminous Flux	>4600 LM	>4600 LM	>5670 LM	>9200 LM
100-277V AC Input	✓	✓	✓	✓
110-347V AC Input	✓	✓		✓
DLC CCT Options	3500K/4000K/5000K	CCT Adjustable 3000K/3500K /4000K	N/A	3500K/4000K/5000K

Product Performance

Optics

High precision light guide made of PMMA material, allows distribution of controlled light to create 45% uplight, 55% downlight light distribution.

Construction

Extruded aluminum housing.

Finish

Powder coat white finish is standard. Optional silver, black or custom colors.

Electrical

Driver	Internal, class 2, replaceable, high efficiency LED driver.
Dimming	Standard constant current electronic driver with 0-10V dimming input; dimming range from 100% down to 10%. Tested Dimmers: Lutron ®Diva-Dvtv, Leviton ®IP-710-DL. Thermal overload protection shuts down the luminaire when system temperatures exceed designed operating conditions.
THD	<20%
Power Factor	>0.9
Emergency	Optional high power LED emergency driver with minimum 90 minutes provided .
Input Voltage	100-277V or 110-347V

LED System

CRI	Minimum 80 or 90 color rendering index
CCT	Choice of 3000K, 3500K, 4000K and 5000K color temperature or CCT adjustable from 3000K, 3500K and 4000K with a great color consistency.
LED	Life minimum 50,000h with 87.8% of lumen maintenance in 25 0 C ambient temperature, in compliance with IES LM-80 testing measurements.
Thermal Management	Aluminum housing acting as the heat sink to maximize life.
Environment	Damp rated in operating ambient temperatures of 0-50℃ .

Mounting

Pendant, individual or continuous run.

Approvals

- cULus listed for damp locations
- Tested to IESNA LM-79 and LM-80
- DesignLights Consortium Qualified and classified for DLC Standard, refer to www.designlights.org for details

Warranty

5-year limited warranty on LED and driver.

Weight

4 FT:11 lbs/5 kg 8 FT:25 lbs/11.5 kg

Mounting

Individual

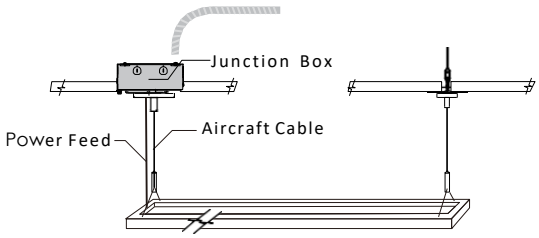

Continuous Run

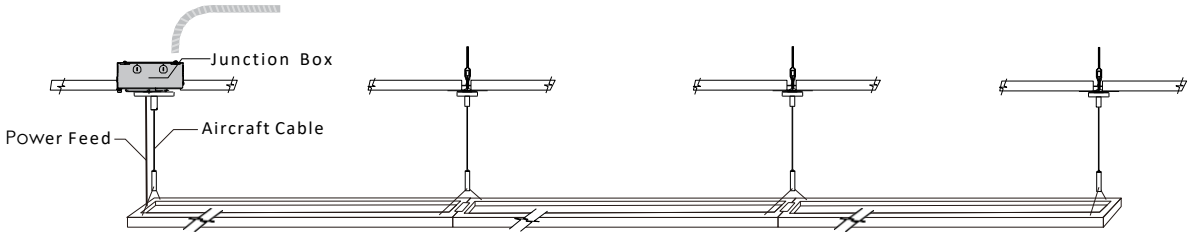

DP4	Connect 9pcs together in 120V AC and 20pcs in 277V AC
DE14	Connect 6pcs together in 120V AC and 15pcs in 277V AC
DP8	Connect 4pcs together in 120V AC and 10pcs in 277V AC

Dimensions

DP4

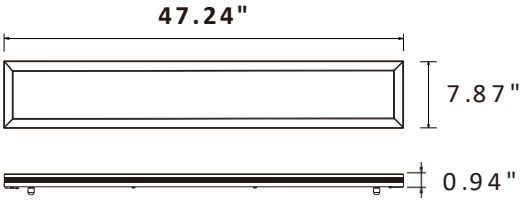

DE14

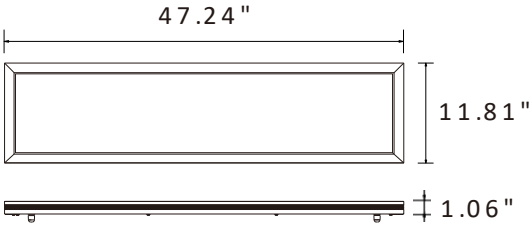

DP8

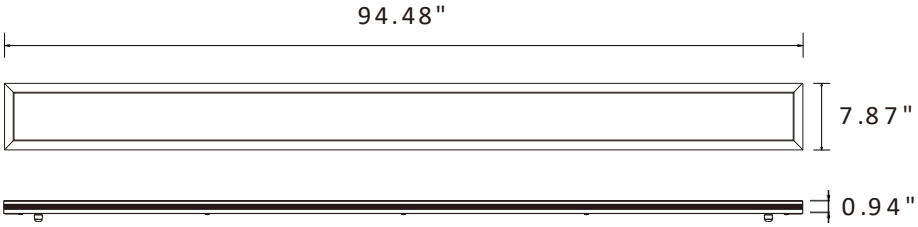

PHOTOMETRY

Fixture photometry has been conducted accredited testing laboratory in accordance with IESNA LM-79-08. IESNA LM-79-08 specifies the entire luminaire as the source resulting in a fixture efficiency of 100%. Result may vary per actual order.

LUMINOUS INTENSITY DISTRIBUTION DIAGRAM

DP4-DM-35T

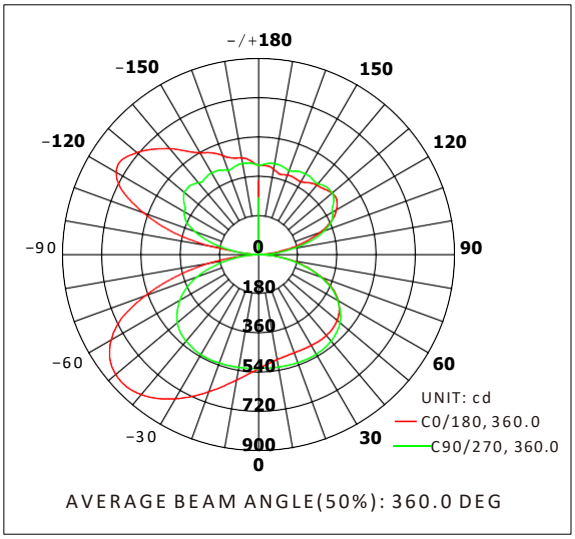

AVERAGE ILLUMINANCE CURVE

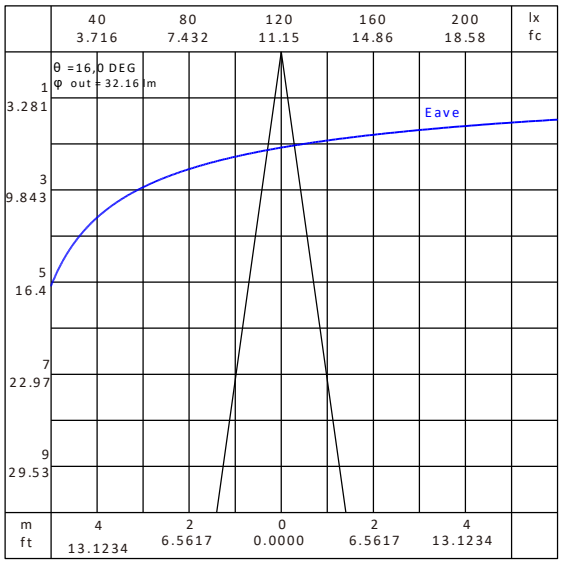

Note: The Curves indicate the illuminated area and the average illumination when the luminaire is at different distance.

Zonal Flux Diagram

T	C0	C45	C90	C135	C180	C225	C270	C315
10	489.7	498.0	524.6	563.6	584.7	563.0	526.0	497.9
20	480.0	486.6	527.3	616.1	670.1	616.6	529.8	485.7
30	482.5	481.7	528.7	668.3	764.4	669.3	530.6	482.6
40	484.9	472.9	518.0	702.8	838.6	703.2	518.3	475.1
50	470.2	447.9	487.2	694.4	856.3	693.0	487.6	450.1
60	422.0	393.3	418.8	618.6	781.1	614.5	416.8	393.6
70	309.9	292.1	305.3	452.8	554.8	446.8	301.5	290.2
80	154.1	142.3	143.6	198.8	234.2	190.1	134.9	138.1
90	0	0	0	0	0	0	0	0
DEG	LUMINOUS INTENSITY:cd							

Zonal Lumen Summary

T	Φ zone	Φ total	ηlum,lamp
0-10	50.33	50.33	1.04,1.04
10-20	153.5	203.9	4.22,4.22
20-30	261.5	465.4	9.64,9.64
30-40	367.4	832.8	17.2,17.2
40-50	453.1	1286	26.6,26.6
50-60	489.3	1775	36.8,36.8
60-70	442.3	2217	45.9,45.9
70-80	285.4	2503	51.8,51.8
80-90	72.60	2575	53.3,53.3
UNIT: lm			

Coefficients Of Utilization

ppc	80%			70%			50%			30%			10%			0
pw	50%	30%	10%	50%	30%	10%	50%	30%	10%	50%	30%	10%	50%	30%	10%	0
pfc	20%			20%			20%			20%			20%			0
RCR	RCR:Room Cavity Ratio							(CU)								
0.0	108	108	108	100	100	100	85	85	85	72	72	72	59	59	59	53
1.0	93	88	84	86	82	79	73	70	68	61	59	57	51	49	48	43
2.0	80	73	67	74	68	63	63	58	54	52	49	46	43	41	38	34
3.0	69	61	54	64	57	51	54	49	44	45	41	38	37	34	31	27
4.0	60	52	45	56	48	42	47	41	37	40	35	31	32	29	26	22
5.0	53	45	38	49	41	36	42	36	31	35	30	26	29	25	22	19
6.0	47	39	32	44	36	30	37	31	26	31	26	23	26	22	19	16
7.0	42	34	28	39	32	26	34	27	23	28	23	20	23	19	16	14
8.0	38	30	24	36	28	23	30	24	20	26	21	17	21	17	14	12
9.0	35	27	21	32	25	20	28	22	18	23	19	15	19	16	13	11
10.0	32	24	19	30	23	18	25	20	16	21	17	14	18	14	11	09

PHOTOMETRY

Fixture photometry has been conducted accredited testing laboratory in accordance with IESNA LM-79-08. IESNA LM-79-08 specifies the entire luminaire as the source resulting in a fixture efficiency of 100%. Result may vary per actual order.

LUMINOUS INTENSITY DISTRIBUTION DIAGRAM

DP4-DM-35E

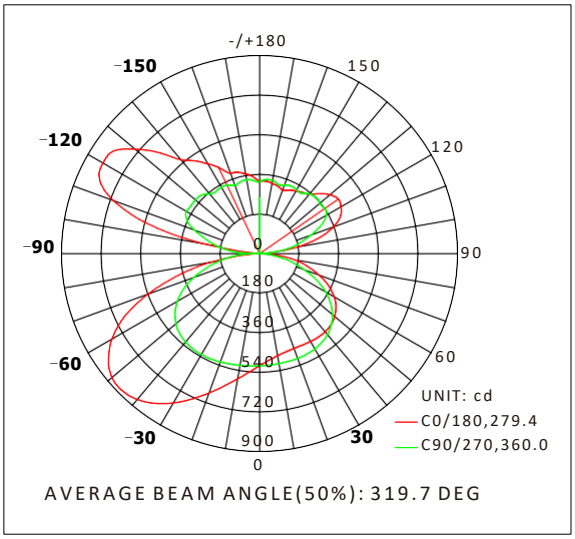

AVERAGE ILLUMINANCE CURVE

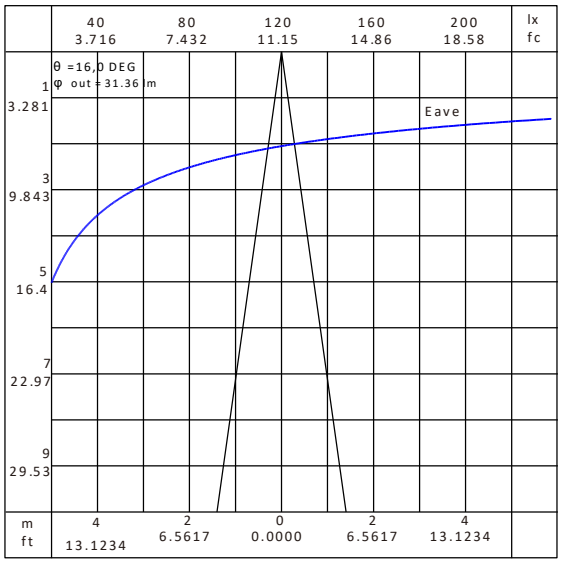

Note: The Curves indicate the illuminated area and the average illumination when the luminaire is at different distance.

Zonal Flux Diagram

T	C0	C45	C90	C135	C180	C225	C270	C315
10	471.3	481.6	507.7	554.6	577.5	557.4	515.8	479.6
20	458.6	467.9	506.7	609.4	673.9	618.7	524.0	463.5
30	462.1	461.8	500.8	659.3	783.5	686.3	530.4	458.3
40	464.3	450.9	480.5	679.8	865.5	734.7	524.5	453.7
50	445.3	417.1	432.6	641.6	875.9	731.1	496.9	434.0
60	391.2	349.2	346.4	529.5	774.6	650.6	431.4	383.7
70	288.2	240.5	216.9	339.6	540.6	481.4	319.7	294.8
80	158.5	110.5	82.70	107.0	218.7	236.4	176.1	174.4
90	0	0	0	0	0	0	0	0
DEG	LUMINOUS INTENSITY:cd							

Zonal Lumen Summary

T	Φ zone	Φ total	ηlum,lamp
0-10	49.09	49.09	1.07,1.07
10-20	150.1	199.2	4.32,4.32
20-30	256.8	456.0	9.9,9.9
30-40	362.2	818.2	17.8,17.8
40-50	444.2	1262	27.4,27.4
50-60	470.1	1733	37.6,37.6
60-70	411.7	2144	46.5,46.5
70-80	263.7	2408	52.3,52.3
80-90	75.98	2484	53.9,53.9
UNIT: lm			

Coefficients Of Utilization

ppc	80%			70%			50%			30%			10%			0
pw	50%	30%	10%	50%	30%	10%	50%	30%	10%	50%	30%	10%	50%	30%	10%	0
pfc	20%			20%			20%			20%			20%			0
RCR	RCR:Room Cavity Ratio						(CU)									
0.0	108	108	108	100	100	100	86	86	86	72	72	72	60	60	60	54
1.0	93	88	84	86	82	79	73	71	68	62	60	58	51	50	48	43
2.0	80	73	67	74	68	63	63	58	55	53	49	47	44	41	39	34
3.0	69	61	55	64	57	51	55	49	45	46	42	38	38	35	32	28
4.0	60	52	45	56	48	42	48	42	37	40	35	32	33	29	27	23
5.0	53	45	38	50	42	36	42	36	31	35	31	27	29	25	22	19
6.0	47	39	33	44	36	31	38	31	27	32	27	23	26	22	19	16
7.0	43	34	28	40	32	26	34	28	23	29	24	20	24	20	17	14
8.0	38	30	25	36	28	23	31	25	20	26	21	17	21	18	15	12
9.0	35	27	22	32	25	20	28	22	18	24	19	15	20	16	13	11
10.0	32	24	19	30	23	18	26	20	16	22	17	14	18	14	12	10

AVERAGE ILLUMINANCE CURVE

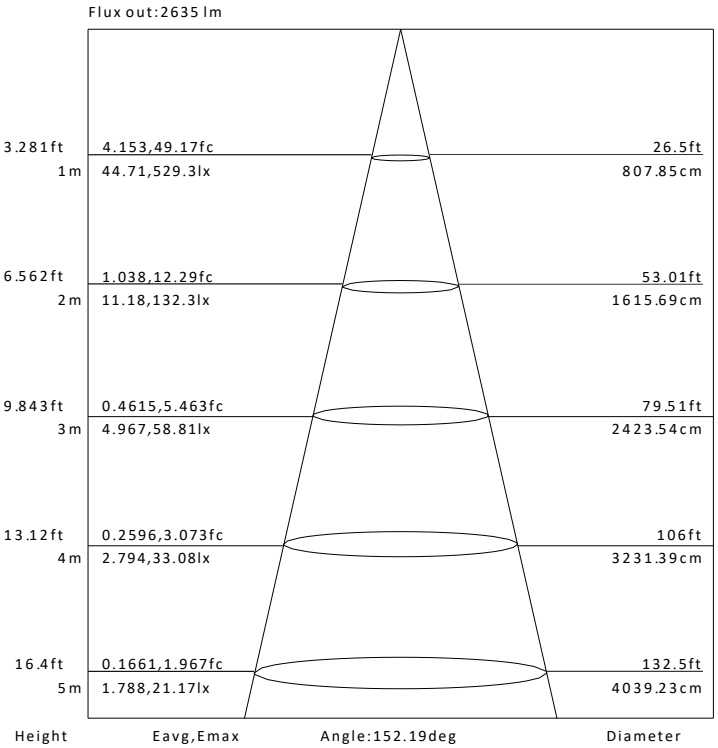

Note: The Curves indicate the illuminated area and the average illumination when the luminaire is at different distance.

PHOTOMETRY

Fixture photometry has been conducted accredited testing laboratory in accordance with IESNA LM-79-08. IESNA LM-79-08 specifies the entire luminaire as the source resulting in a fixture efficiency of 100%.Result may vary per actual order.

LUMINOUS INTENSITY DISTRIBUTION DIAGRAM

DE14-DM-35E

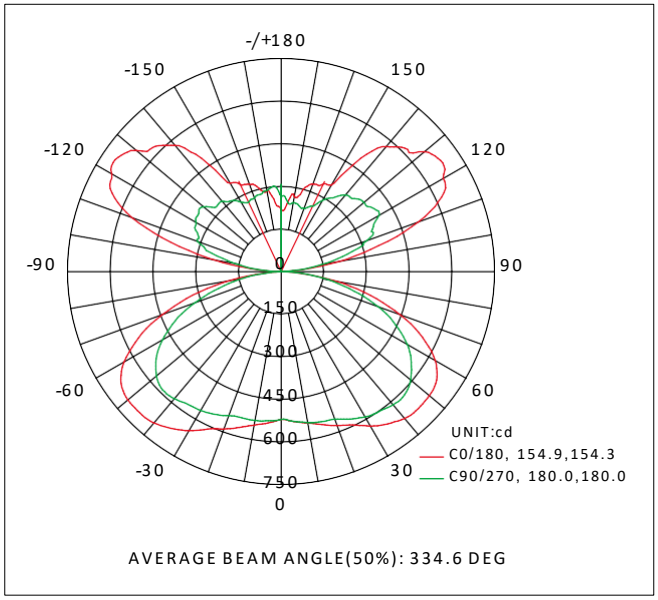

ZONAL FLUX DIAGRAM

Y	C0	C45	C90	C135	C180	C225	C270	C315
10	541.5	541.8	539.8	539.8	548.7	539.3	532.3	537.7
20	576.8	571.1	552.7	552.7	589.4	565.9	540.0	563.1
30	627.8	612.7	590.9	590.9	646.9	602.6	564.6	592.5
40	674.6	656.4	612.4	612.4	695.6	638.9	584.2	611.4
50	679.5	666.2	593.9	593.9	702.4	643.9	571.6	590.5
60	624.4	608.9	510.9	510.9	637.2	586.1	481.7	513.0
70	445.4	448.3	363.8	363.8	444.8	416.5	322.8	354.6
80	197.3	202.7	168.7	168.7	181.1	166.2	133.8	138.2
90	0.7812	1.241	1.869	1.869	0.5981	1.205	1.379	1.404
DEG	LUMINOUS INTENSITY:cd							

ZONAL LUMEN SUMMARY

T	Φzone	Φtotal	ηlum,lamp
0-10	50.93	50.93	1.02,1.02
10-20	156.9	207.9	4.16,4.16
20-30	271.8	479.6	9.59,9.59
30-40	391.6	871.2	17.4,17.4
40-50	496.1	1367	27.3,27.3
50-60	543.2	1911	38.2,38.2
60-70	487.0	2398	47.9,47.9
70-80	304.5	2702	54,54
80-90	68.73	2771	55.4,55.4
UNIT: lm			

COEFFICIENTS OF UTILIZATION

ppc	80%			70%			50%			30%			10%			0
pw	50%	30%	10%	50%	30%	10%	50%	30%	10%	50%	30%	10%	50%	30%	10%	0
pfc	20%			20%			20%			20%			20%			0
RCR	RCR:Room Cavity Ratio			(CU)												
0.0	108	108	108	101	101	101	86	86	86	73	73	73	61	61	55	55
1.0	93	89	85	86	83	79	74	71	69	63	61	59	52	49	44	44
2.0	80	73	67	74	68	63	63	59	55	54	50	47	44	40	35	35
3.0	69	61	54	64	57	51	55	49	45	46	42	38	38	32	28	28
4.0	60	52	45	56	48	42	48	42	37	40	36	32	33	27	23	23
5.0	53	44	38	49	41	36	42	36	31	36	31	27	29	23	19	19
6.0	47	38	32	44	36	30	38	31	27	32	27	23	26	19	16	16
7.0	42	34	28	39	32	26	34	27	23	29	24	20	24	17	14	14
8.0	38	30	24	36	28	23	31	24	20	26	21	17	22	15	12	12
9.0	35	27	21	32	25	20	28	22	18	24	19	15	20	13	11	11
10.0	32	24	19	29	22	18	25	20	16	22	17	14	18	12	10	10

ZONAL LUMEN TABULATION

Zonal Lumen Summary		
Zone	Lumens	%Luminaire
0-30	455.9	9.9%
0-40	818.2	17.8%
0-60	1,732.7	37.6%
60-90	751.2	16.3%
70-100	412.7	9%
90-120	829.8	18%
0-90	2,483.9	53.9%
90-180	2,124.2	46.1%
0-180	4,608.0	100%

Lumens Per Zone					
Zone	Lumens	% Total	Zone	Lumens	% Total
0-10	49.1	1.1%	90-100	73.2	1.6%
10-20	150.1	3.3%	100-110	314.6	6.8%
20-30	256.8	5.6%	110-120	442.0	9.6%
30-40	362.3	7.9%	120-130	426.1	9.2%
40-50	444.3	9.6%	130-140	334.4	7.3%
50-60	470.2	10.2%	140-150	240.6	5.2%
60-70	411.6	8.9%	150-160	164.1	3.6%
70-80	263.6	5.7%	160-170	96.9	2.1%
80-90	75.9	1.6%	170-180	32.3	0.7%

Product design and development is an ongoing process at OKT Lighting. We reserve the right to change specifications.